Datasheet of Hose balancer THB-65

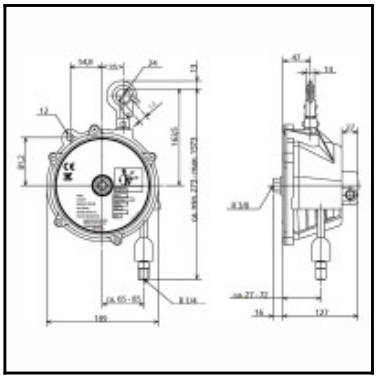

Description

Hose balancer, payload range 5 - 6,5 kg, cable length 1,3 m, with connection R 1/4"i., air connection R 3/8"i.

Industrial hose balancer. Steady pulling force due to ne conical hose drum. The inner diameter of the hose (8,5 mm) ensures appropriate air supply for larger tools. A safety lock prevents the hanged tool from falling if the spring breaks.

Details

Series:	THB
Series long:	THB
Payload range in kg:	5 - 6,5
Cable length in m:	1,3
Material casing:	Plastic
Suspension:	Turnable carabiner
Load setting:	External hexagon
Cable stop:	Yes, adjustable
Locking:	No
Connection (casing):	Female thread R 3/8"
Connection (hose):	Female thread R 1/4"
Maximum working pressure in bar:	8
Spring fracture protection:	Yes
Fall protection:	Preparation existing
Weight in kg:	2,2

Dimensions

Hose Inner diameter in mm:	8,5